HORN, IGNITION KEY REMINDER, COURTESY, AND LIGHTER CIRCUITS

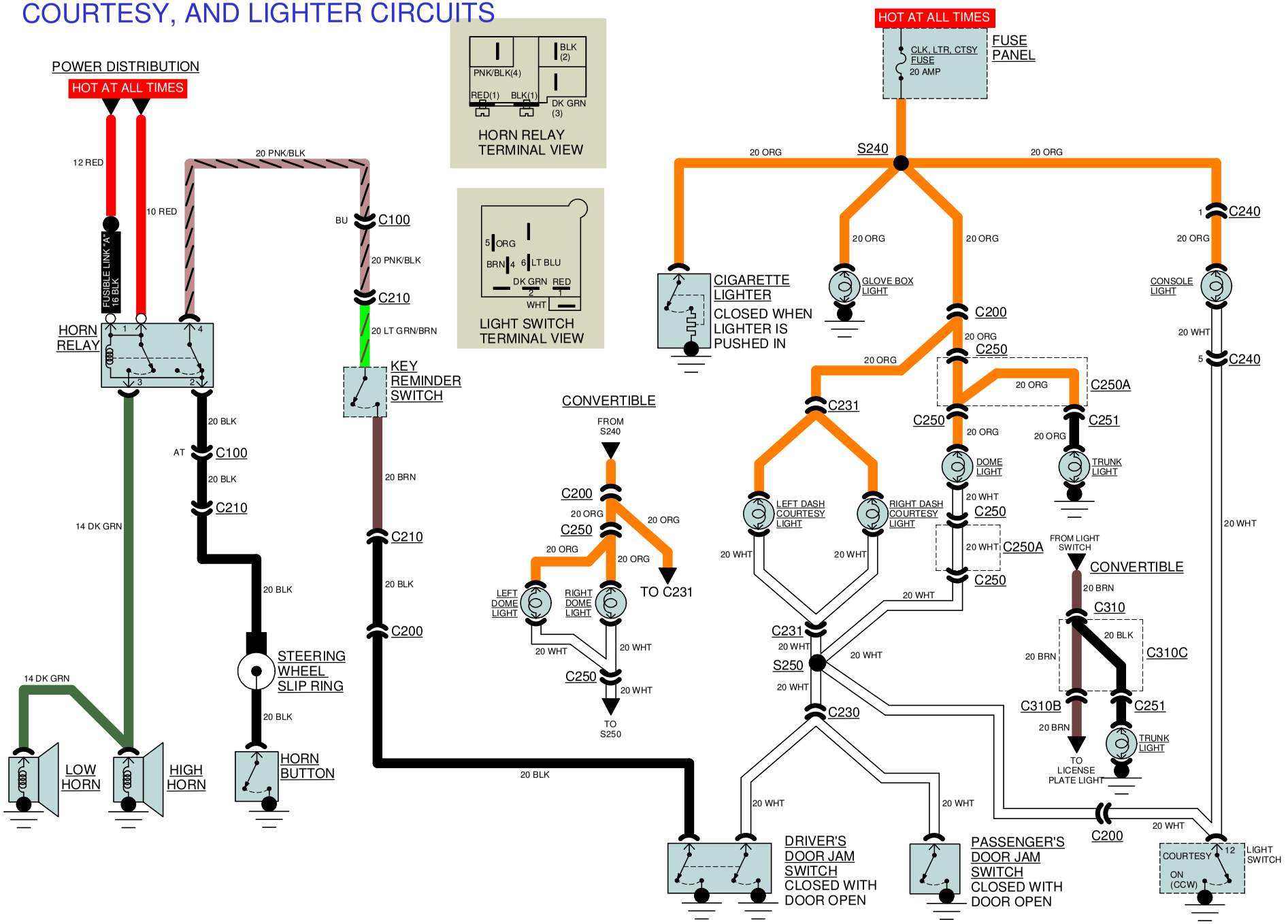

Copyright © 2005 Larry DuBois