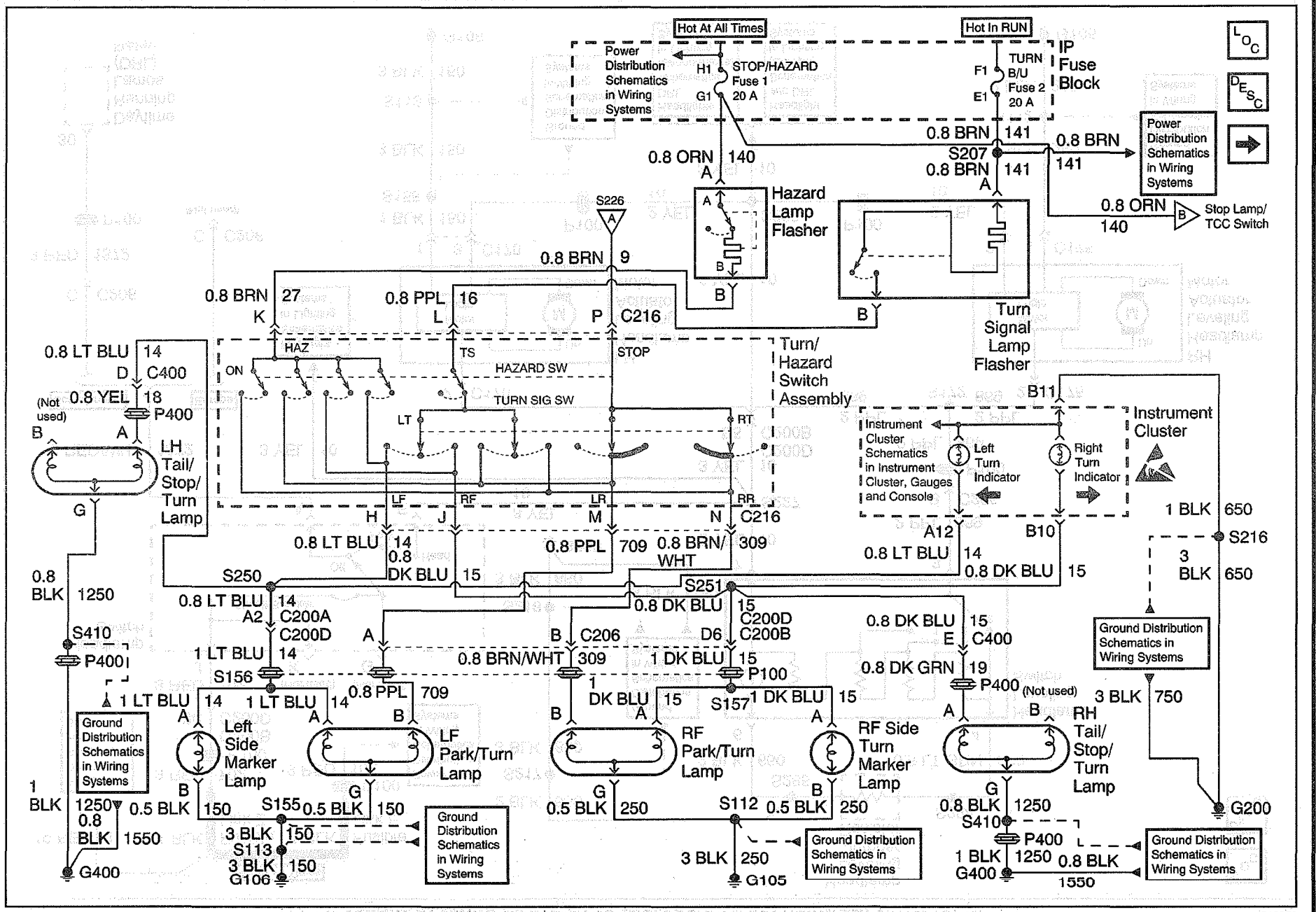Exterior Lights Schematics (Japan) (Chevrolet: Side Marker Lamps, Park/Turn Lamps)